Smart Irrigation,
Create green Lives!

Product Manual 2024

Mirabsaze.com
021-77297289
021-76706855
Misaco.irrigation
ZM 阳光雨人 SUN-RAINMAN

ZM

METAL IMPACT SPRINKLER

AGRICULTURE

ZM8041





• OPERATING RANGE

WORKING PRESSURE: 1.7-5.5 bar
FLOW RATE: 0.66-3.27m³/ h
SPRAY RADIUS: 12-16m

• APPLICATIONS

1.USAGE
Designed for agricultural use in solid set,
Can also be used in landscape irrigation;

2.FEATURES
Heavy duty brass construction;
Stainless steel springs and fulcrum pin;
3 / 4 " BSP / NPT male thread;
Dual nozzle design with a better performance;
20° to 340° arc or full circle operation;
Stainless steel trip collars ;

• PARTS & ACCESSORIES

#	Part No.	Material	Qty
1	8041-1	SS304	1
2	8041-2	POM	1
3	8041-3	BRASS	1
4	8041-4	BRASS	1
5	8041-5	POM	1
6	8041-6	BRASS	1
7	8041-7	BRASS	1
8	8041-8	BRASS	1
9	8041-9	BRASS	1
10	8041-10	BRASS	1
11	8041-11	BRASS	1
12	8041-12	SS304	1
13	8041-13	SS304	1
14	8041-14	SS304	1
15	8041-15	POM	1
16	8041-16	TERLON	1
17	8041-17	SS304	2
18	8041-18	SS304	1
19	8041-19	SS304	1
20	8041-20	SS304	1
21	8041-21	SS304	1
22	8041-22	BRASS	1
23	8041-23	BRASS	1
24	8041-24	TERLON	1
25	8041-25	RUBBER	2

Nozzle specification data sheet

8041 XX XX		
Part No.	Nozzle Size	Nozzle Size
8041	XX	XX
Nozzle Size	Inch	MM
06	3/32"	2.38
08	1/8"	3.17
09	9/64"	3.57
10	5/32"	3.96
11	11/64"	4.36
12	3/16"	4.76
13	13/64"	5.15
14	7/32"	5.55
PG	PLUG	PLUG

• PACKAGING

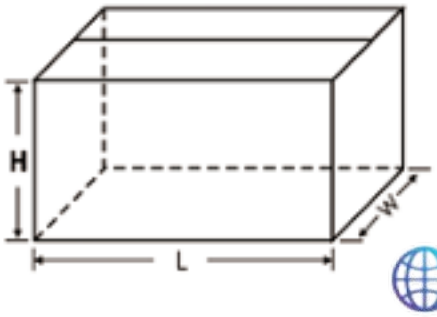

Item#	Qty/ctn	N.W./ctn	G.W./ctn	L x W x H (cm)	M3
ZM8041	24	13.11Kgs	13.72Kgs	43x34x15.5	0.025

Mirabsaze.com 021-77297289 021-76706855 Misaco.irrigation

ZM8041



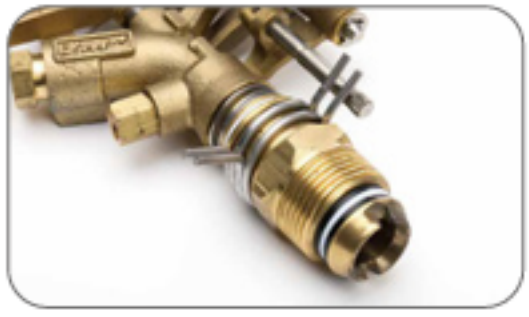



金属摇臂喷头
METAL IMPACT SPRINKLER

Nozzle Size		5/32" X Plug								11/64" X Plug								3/16" X Plug								13/64" X Plug								7/32" X Plug							
Pre.	kg/cm²	1.75	2.10	2.45	2.80	3.25	3.50	3.85	4.20	1.75	2.10	2.45	2.80	3.15	3.50	3.85	4.20	1.75	2.10	2.45	2.80	3.25	3.50	3.85	4.20	1.75	2.10	2.45	2.80	3.15	3.50	3.85	4.20	1.75	2.10	2.45	2.80	3.25	3.50	3.85	4.20
Flow Rate	m³/h	0.795	0.870	0.940	1.010	1.070	1.130	1.185	1.295	0.960	1.050	1.140	1.215	1.290	1.360	1.430	1.480	1.165	1.265	1.355	1.445	1.545	1.630	1.705	1.775	1.335	1.475	1.605	1.725	1.830	1.925	2.010	2.085	1.550	1.715	1.875	2.010	2.135	2.240	2.335	2.405
Rad.	m	12.00	12.00	12.00	13.00	13.00	13.00	13.00	14.00	12.00	12.00	13.00	13.00	13.00	14.00	14.00	14.00	12.00	13.00	13.00	13.00	14.00	14.00	14.00	14.00	13.00	13.00	13.00	14.00	14.00	14.00	14.00	15.00	13.00	13.00	14.00	14.00	14.00	15.00	15.00	16.00

Nozzle Size		3.96 X 2.38 5/32" X 3/32"								4.36 X 2.38 11/64" X 3/32"								4.76 X 2.38 3/16" X 3/32"								4.76 X 3.17 3/16" X 1/8"								5.15 X 3.17 13/64" X 1/8"								5.55 X 3.17 7/32" X 1/8"							
Pre.	kg/cm²	1.75	2.10	2.45	2.80	3.25	3.50	3.85	4.20	1.75	2.10	2.45	2.80	3.15	3.50	3.85	4.20	1.75	2.10	2.45	2.80	3.15	3.50	3.85	4.20	1.75	2.10	2.45	2.80	3.15	3.50	3.85	4.20	1.75	2.10	2.45	2.80	3.15	3.50	3.85	4.20
Flow Rate	m³/h	1.095	1.190	1.290	1.385	1.470	1.550	1.625	1.690	1.260	1.375	1.490	1.590	1.690	1.785	1.870	1.950	1.480	1.570	1.700	1.830	1.940	2.050	2.145	2.250	1.682	1.848	2.005	2.150	2.290	2.400	2.520	2.630	1.880	2.075	2.255	2.420	2.585	2.700	2.855	2.950	2.095	2.315	2.520	2.700	2.880	3.020	3.155	3.270
Rad.	m	12.50	13.00	13.50	13.50	13.50	13.50	14.00	14.00	12.50	13.50	13.50	14.00	14.00	14.50	14.50	14.50	13.00	14.00	14.00	14.50	14.50	15.00	15.00	15.50	13.00	14.00	14.00	14.50	14.50	15.00	15.00	15.50	13.00	14.00	14.50	15.00	15.00	15.50	15.50	16.00	13.50	14.50	15.00	15.50	15.50	16.00	16.00	16.00